ODM items

WM-6393.....1
WM-6388A-K..... 2
WM-6388/BUILD.....3
WM-6388/ANIL.....4
WM-6388/DINO..... 5
WM-6269 & WM-6277.....6
WM-6190.....7
WM-6105.....8
WM-5737.....9
WM-6149...10
WM-5740....11
WM-6279....12
WM-6197....13
WM-6359/W...14
WM-6535...15
WM-6167...16
WM-6451...17
WM-6463...18
WM-6464...19
WM-3470C3392D/W...20
WM-6504/W...21
WM-6427...22
WM-6616...23
WM-6394...24
WM-6534...25
WM-6522...26

Design by Wing Mau Products Development Ltd. All Rights Reserved.

XCD2
Vending MacBox (for PET + LDPE Bag)
Box Size: W-200mm, D-200mm, H-200m
Quantity: 24PCS

XCD3 / XCD4
Monotone Vending MacBox (for Capsule)
Box Size: 250 x 150 x 200mm
Quantity:
XCD3 - 40PCS IC49-54 Capsule
XCD4 - 20PCS IC63-68 Capsule

XPF1 / XPF2
Vending MacBox (for Capsule)
Box Size: 6.5" x 8" x 9"
Quantity:
XPF1
40PCS IC49-54 Capsule
XPF2
18PCS IC63-68 Capsule

IC49-54 Capsule
Capsule Size: Dia-49mm, H-54mm
IC63-68 Capsule
Capsule Size: Dia-63mm, H-68mm

Bandolia, Blister Pack, Header Card, Printed Tag, Display Box, Capsule With Colorful Wrap & Polybag With Card

*Discrepancies may be found in real products

ILLUMINATED!!

JARDINE HOUSE

TST CLOCK TOWER

INTERNATIONAL COMMERCE CENTRE

THE CENTER

LANGHAM PLACE

INTERNATIONAL FINANCE CENTRE

BANK OF CHINA

SPACE MUSEUM

Design by Wing Mau Products Development Ltd. All Rights Reserved.

WM-6393
8 STYLES FAMOUS BUILDING WITH FLASHLIGHT BASE

Building Assembling Size: L-54mm, W-48mm, H-32-82mm
Base Size: L-54mm, W-48mm, H-13mm
WM-6393HP - Each PC With Sticker In PB; 100PCS In Large PB; 400PC/800PC/3.8'
WM-6393HP/IC - Each PC In PB With I.S. & Sticker In IC6368 Capsule; 50PCS In Large PB; --/300PC/3.2'
Material: ABS, GPPS, ABS/T, NP-PVC

Tolerance: ±0.02mm

Design by Wing Mau Products Development Ltd. All Rights Reserved.

11 STYLES OF BLING-BRICKS

WM-6388A

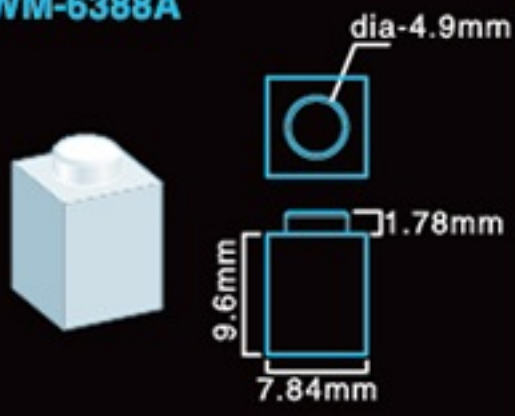

WM-6388B

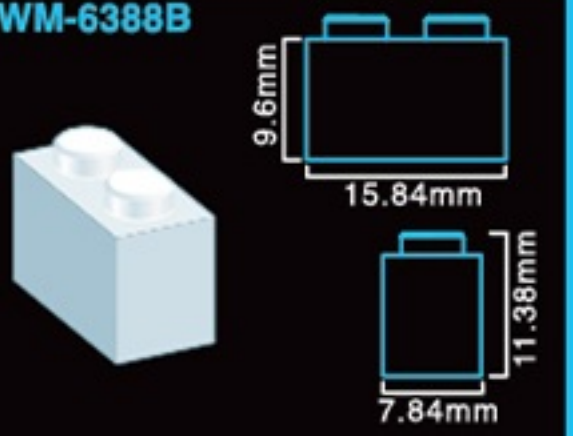

WM-6388C

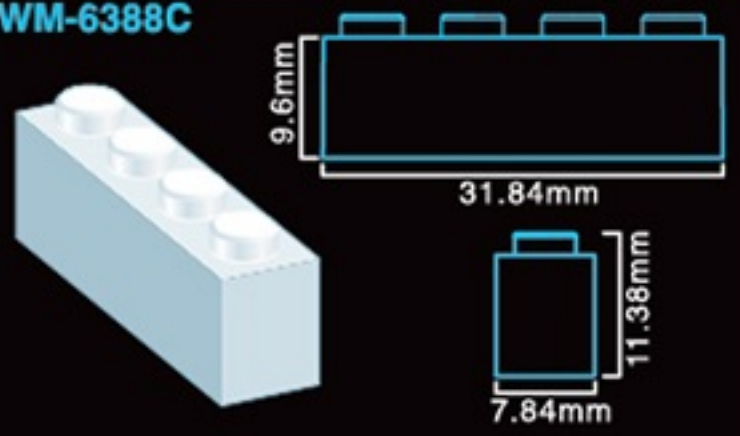

WM-6388D

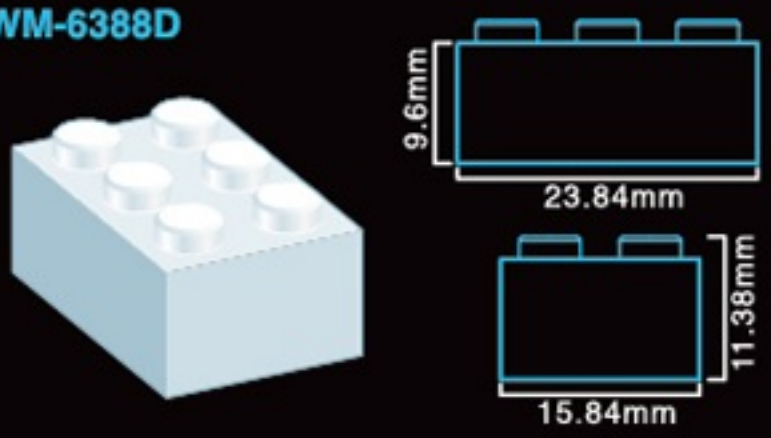

WM-6388E

WM-6388F

WM-6388G

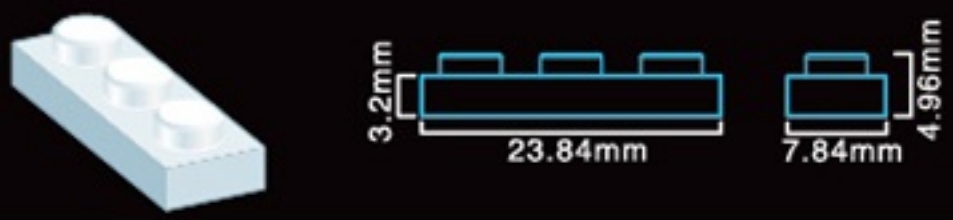

WM-6388H

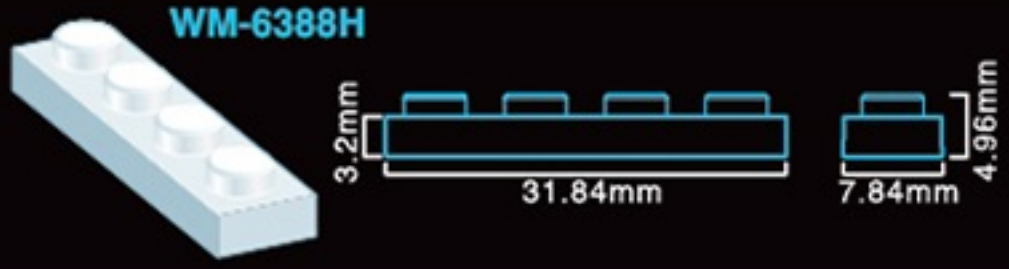

WM-6388I

WM-6388J

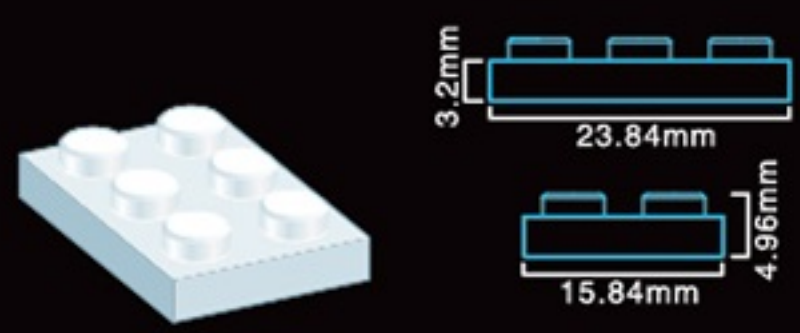

WM-6388K

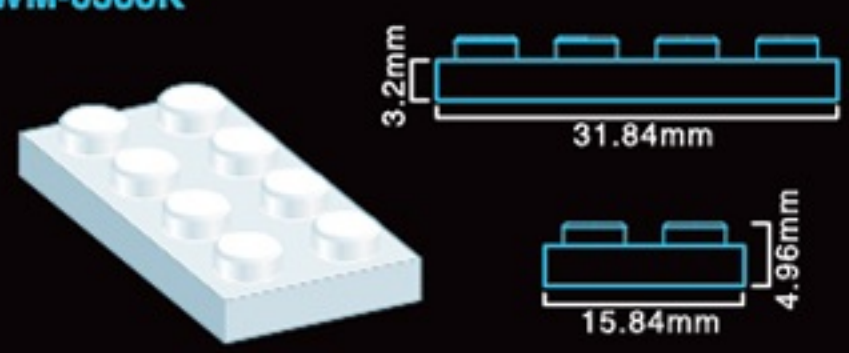

*Discrepancies may be found in real products

BLING-BRICKS

EIFFEL TOWER

BIG BEN

TEMPLE OF ARTEMIS

THE FORBIDDEN CITY

ARC DE TRIOMPHE

EASTER ISLAND STATUE

Design by Wing Mau Products Development Ltd. All Rights Reserved.

WM-6388/BUILD
6 STYLES BUILDING SERIES BLING-BRICKS

Size: L-32-56mm, W-24-48mm, H-40-110mm

WM-6388/BUILD - Each Set Unassembled With I.S. In PB; 100PCS In Large PB; 300PC/600PC/3.9'

WM-6388/BUILD/IC - Each Set Unassembled In PB With I.S. In IC6368 Capsule;
50PCS In Large PB; --/300PC/3.2'

Material: ABS/T

*Discrepancies may be found in real products

BLING-BRICKS

DEER

RABBIT

GIRAFFE

KOALA

TURTLE

BIRD

Design by Wing Mau Products Development Ltd. All Rights Reserved.

WM-6388/ANIL
6 STYLES ANIMAL SERIES BLING-BRICKS

Size: L-32-64mm, W-32-64mm, H-21-62mm

WM-6388/ANIL - Each Set Unassembled With I.S. & 4PCS Diamond Sticker In PB; 100PCS In Large PB; 300PC/600PC/3.9'

WM-6388/ANIL/IC - Each Set Unassembled In PB With I.S. & 4PCS Diamond Sticker In IC6368 Capsule; 50PCS In Large PB; --/300PC/3.2'

Material: ABS/T

*Discrepancies may be found in real products

FLYING DINOSAUR

PARASAUROLOPHUS

TYRANNOSAURUS REX

VELOCIRAPTOR

STEGOSAURUS

APATOSAURUS

BLING-BRICKS

WM-6388/DINO
6 STYLES DINOSAUR SERIES BLING-BRICKS

Size: L-61-115mm, W-32-80mm, H-40-69mm

WM-6388/DINO - Each Set Unassembled With I.S. & 2 PCS Diamond Sticker In PB; 100PCS In Large PB; 300PC/600PC/3.9'

WM-6388/DINO/IC - Each Set Unassembled In PB With I.S. & 4PCS Diamond Sticker In IC6368 Capsule; 50PCS In Large PB; --/300PC/3.2'

Material: ABS/T

Design by Wing Mau Products Development Ltd. All Rights Reserved.

*Discrepancies may be found in real products

BLING-BRICKS

WM-6269
2 STYLES LITEUP BLOCKS

CHANGING COLOR

WM-6277
LITEUP BASE

ILLUMINATED!!

Design by Wing Mau Products Development Ltd. All Rights Reserved.

WM-6269 2 STYLES LITEUP BLOCK

Size: L-24-32mm, W-16mm, H-18mm
10PCS In PB; 500PC/1000PC/0.4'
Material: ABS/T

WM-6277 LITEUP BASE

Size: L-48mm, W-48mm, H-21mm
10PCS In PB; 200PC/400PC/1.1'
Material: ABS/T

*Discrepancies may be found in real products

BATTLE SET

GOLD WHEEL

RED WHEEL

GREEN WHEEL

SILVER WHEEL

WM-6190
4 STYLES TIRE TRAX

Size: Dia-44mm, H-21mm

WM-6190MG - Each Set (2PCS) In PB;
500 Sets In Large PB; 500SET/1000SET/4.8'

WM-6190MG/IC - Each Set (2PCS) In PB With I.S. In IC4954 Capsule; 100 Sets In Large PB; --/600SET/3.3'

Material: ABS, TPR

Exclusive: U.S.A. & Canada

Design by Wing Mau Products Development Ltd. All Rights Reserved.

*Discrepancies may be found in real products

FOKKER D VII

◀ STAND INCLUDED

ROYAL AIRCRAFT FACTORY RE8

SUPERMARINE WALRUS MKII

DE HAVILLAND TIGER MOTH

SOPWITH TRIPLANE

ROLAND CLII

Design by Wing Mau Products Development Ltd. All Rights Reserved.

WM-6105
6 STYLES AIRSTRIKE MODEL

Size: L-57-97mm, W-45-81mm, H-46-61mm

WM-6105HP - Each PC In PB; 100PCS In Large PB; 400PC/800PC/5.0'

WM-6105HP/IC - Each PC In PB With I.S. In IC6368 Capsule; 50PCS In Large PB; --/300PC/3.2'

Material: ABS

*Discrepancies may be found in real products

BEETLE

TRUCK

FORKLIFT

AMBULANCE

TAXI

FIRE ENGINE

Design by Wing Mau Products Development Ltd. All Rights Reserved.

WM-5737
6 STYLES MINI CRASHING CARS

Size: L-52-60mm, W-28-32mm, H-28-52mm

WM-5737HP - Each PC In PB; 100PCS In Large PB; 400PC/800PC/4.8'

WM-5737HP/IC - Each PC In PB With Sticker & I.S. In IC6368 Capsule; 50PCS In Large PB; --/300PC/3.2'

Material: ABS, NP-PVC

*Discrepancies may be found in real products

6 COLORS

6 COLORS

6 COLORS

Design by Wing Mau Products Development Ltd. All Rights Reserved.

WM-6149
5 STYLES CAMERA 2

Size: L-29-89mm, W-30-51mm, H-21-50mm
WM-6149HP - Each PC In PB; 400PCS In Large PB; 400PC/800PC/4.8'
WM-6149HP/IC - Each PC In PB With I.S. In IC6368 Capsule; 50PCS In Large PB; --/300PC/3.2'
Material: ABS, NP-PVC

*Discrepancies may be found in real products

Design by Wing Mau Products Development Ltd. All Rights Reserved.

WM-5740
6 STYLES PORTABLE MINI PINBALL GAMEBOX WITH BALLCHAIN

Size: L-31-32mm, W-33-62mm, H-31-58mm

WM-5740/NC - Each PC In PB; 100PCS In Large PB; 400PC/800PC/4.2'

WM-5740/NC/IC - Each PC In PB With I.S. In IC6368 Capsule; 50PCS In Large PB; --/300PC/3.2'

Material: ABS, NP-PVC

*Discrepancies may be found in real products

GROUND DRILL

HANDY DRILL

CIRCULAR SAW

CHAIN SAW

Design by Wing Mau Products Development Ltd. All Rights Reserved.

WM-6279
4 STYLES WIND UP POWER TOOL WITH BALLCHAIN

Size: L-52-115mm, W-23-43mm, H-39-116mm

WM-6279HP/NC - Each PC In PB; 100PCS In Large PB; 400PC/800PC/4.5'

WM-6279HP/NC/IC - Each PC In PB With I.S. In IC6368 Capsule; 50PCS In Large PB; --/300PC/3.2'

Material: ABS

*Discrepancies may be found in real products

MOUSE SPIDERS

CHRYSOCHROA SAUNDERSI

MADECASSIA ROTHSCHILDI

ODONTOLABIS DALMANNI INTERMEDIA

ODONTOLABIS FEMORALIS

BRACHYPELMA SMITHI

Design by Wing Mau Products Development Ltd. All Rights Reserved.

WM-6197
3 STYLES (6 VERSIONS) WIND UP INSECT

Size: L-63-71mm, W-45-68mm, H-21-26mm

WM-6197HP/PC09 - Each PC In PB; 100PCS In Large PB; 400PC/800PC/5.0'

WM-6197HP/PC09/IC - Each PC In PB With I.S. In IC6368 Capsule; 50PCS In Large PB; --/300PC/3.2'

Material: NP-PVC

*Discrepancies may be found in real products

1) Fill the magic egg with water. Water level must exceed the base of animal.

2) The animal begins to lay eggs after 30-60 minutes.

3) The eggs will grow bigger and bigger. Shake the magic egg to pour out the water.

FROG

** Note:
1. Refill the magic egg with water, the eggs will grow again.
2. The eggs will not frow anymore once they are full grown. (They grow to full size in 3 hours approx.)

DUCK

SWAN

TURTLE

SNAKE

CLOWN FISH

LOBSTER

CRAB

GOLDENFISH

CROCODILE

Design by Wing Mau Products Development Ltd. All Rights Reserved.

WM-6359/W
10 STYLES MAGIC ANIMAL EGG

Size: Dia-55mm, H-65mm
Each PC With I.S. & Wrapped; 30PCS In Large PB; 30PC/120PC/1.2'
Material: PC & Polyresin

*Discrepancies may be found in real products

Design by Wing Mau Products Development Ltd. All Rights Reserved.

WM-6535
8 STYLES ANIMALS BALLOON WITH PHONE CORD

Size: L-26-46mm, W-13-28mm, H-30-45mm

WM-6535HP/TC - Each PC In PB; 100PCS In Large PB; 500PC/1000PC/3.9'

WM-6535HP/TC/IC - Each PC In PB With I.S. In IC6368 Capsule; 50PCS In Large PB; --/300PC/3.2'

Material: NP-PVC

*Discrepancies may be found in real products

Create your own styles ... ...

Design by Wing Mau Products Development Ltd. All Rights Reserved.

WM-6167
6 STYLES COMPUTER SCREEN FLOWER SCENE

Size: L-60mm, W-33mm, H-30-46mm

WM-6167HP - Each PC In PB; 100PCS In Large PB; 400PC/800PC/4.0'

WM-6167HP/IC6368 - Each PC Unassembling In PB With I.S. In IC6368 Capsule; 50PCS In Large PB; --/300PC/3.2'

Material: ABS, T-PVC

*Discrepancies may be found in real products

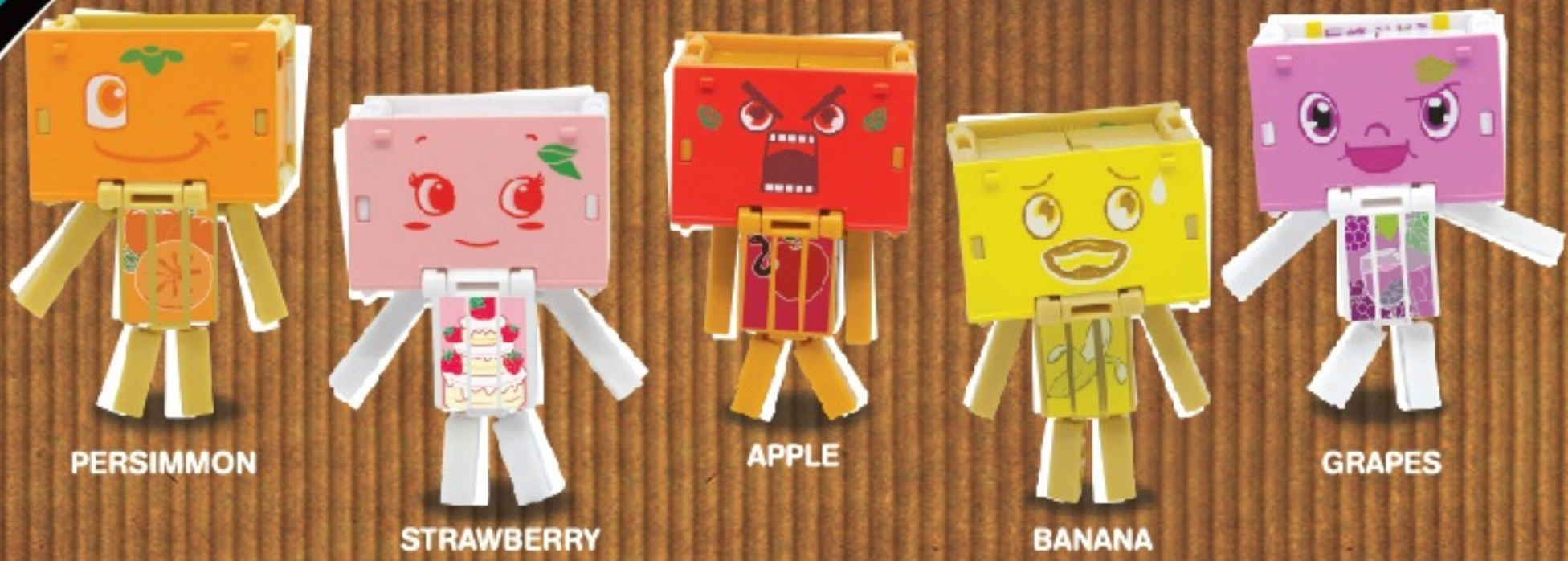

KIWIFRUIT

back side

TRANSFORM

WM-6451
6 STYLES FRUIT CARTON BOX CHARACTERS

Size: L-64mm, W-32mm, H-69mm

WM-6451/SS - Each PC With Sticker In PB;
100PCS In Large PB; 300PC/600PC/3.5'

WM-6451/SS/IC - Each PC With Sticker & I.S. In IC6368 Capsule; 50PCS In Large PB; --/300PC/3.2'

Material: ABS

Design by Wing Mau Products Development Ltd. All Rights Reserved.

*Discrepancies may be found in real products

Dreamy Knitters

Knit Your Own Colourful Goods!

D.I.Y.

Design by Wing Mau Products Development Ltd. All Rights Reserved.

WM-6463
DREAMY KNITTERS

Each Set Including: 2PCS Needles,
5PCS "S" Shape & 30PCS Silicon Ring
Needle Size: L-100mm, W-9mm, H-7mm
WM-6463 - Each Set In PB; 100PCS In Large PB; 500PC/1000PC/3.8'
WM-6463/IC - Each Set In PB With I.S. In IC6368 Capsule; 50PCS In Large PB; --/300PC/3.2'
Needle & "S" Shape Material: ABS

*Discrepancies may be found in real products

WM-6464/GL
GLOW-IN-THE-DARK COLOR

WM-6464/NN
NEON COLOR: GREEN, PURPLE, BLACK, PINK & LIGHT BLUE

Pop Bangle

Flip with POP style

Design by Wing Mau Products Development Ltd. All Rights Reserved.

WM-6464
8 STYLES BANGLE POP

Size: L-60-78mm, W-20-50mm, H-12mm
WM-6464/NN, WM-6464/GL - Each PC In PB; 100PCS In Large PB; 500PC/1000PC/3.3'
WM-6464/IC - Each PC In PB With I.S. In IC4954 Capsule;
100PCS In Large PB; --/600PC/3.3'
Material: TPR

*Discrepancies may be found in real products

FRANCE

ARGENTINA

SPAIN

ENGLAND

BRAZIL

ITALY

GERMANY

PORTUGAL

Design by Wing Mau Products Development Ltd. All Rights Reserved.

WM-3470C3392D/W

8 STYLES 2014 NATIONAL SOCCER T-SHIRT WHISTLE WITH PAINTING (WITH 1 BEAD INSIDE WHISTLE) + SOCCER CAPSULE IN 8 ASSORTED COLOR

T-Shirt Size: H-40mm, W-44mm, T-36mm

Soccer Capsule Size: Dia-50mm

Each PC With I.S. & Wrapping; 100PCS In Large PB; --/600PC/3.2'

Material: HIPS

*Discrepancies may be found in real products

GERMANY

after several minutes

PORTUGAL

BRAZIL

ITALY

CHAMPION TROPHY

ENGLAND

ARGENTINA

SPAIN

BRAZIL

ENGLAND

ARGENTINA

SPAIN

CHAMPION TROPHY

GERMANY

PORTUGAL

ITALY

Design by Wing Mau Products Development Ltd. All Rights Reserved.

WM-6504/W
8 STYLES SOCCERS PAPER WEIGHT

Size: Dia-55mm, H-65mm

Each PC With I.S. & Wrapped; 30PCS In Large PB; 30PC/120PC/1.2'

Material: PC, NP-PVC

*Discrepancies may be found in real products

中國工藝

【新春大吉】

【年年有餘】

【財源廣進】

【福星高照】

【如意吉祥】

【五福臨門】

【招財進寶】

【迎春接福】

ROTATABLE

D.I.Y.

Design by Wing Mau Products Development Ltd. All Rights Reserved.

WM-6427
8 STYLES CHINESE NEW YEAR D.I.Y. PHONE CORD

Size: L-30mm, W-11mm, H-38-40mm

WM-6427/TC - Each PC In PB; 100PCS In Large PB; 1000PC/2000PC/3.8'

WM-6427/TC/IC - Each PC In PB With I.S. In IC4954 Capsule; 100PCS In Large PB; --/600PC/3.3'

Material: ABS

*Discrepancies may be found in real products

Design by Wing Mau Products Development Ltd. All Rights Reserved.

WM-6616
6 STYLES D.I.Y. CHRISTMAS TREE WITH LIGHT

Size: L-65-78mm, W-65-78mm, H-33-110mm
WM-6616HP - Each PC In PB; 100PCS In Large PB; 500PC/1000PC/4.5'
WM-6616HP/IC - Each PC In PB With I.S. In IC6368 Capsule; 50PCS In Large PB; --/300PC/3.2'
Material: ABS/T

*Discrepancies may be found in real products

【龍鳳燭】

【敬茶茶壺】

(2 colorways)

【新郎禮服匙套】

【鴛鴦枕】

(2 colorways)

【新娘裙褂匙套】

【新娘鞋】

(2 colorways)

【三朝回門燒豬】

【新娘頭飾】

【小酒杯】

【子孫尺、上頭用剪刀】

(2 colorways)

【三層禮餅盒】

【金豬牌鏈咀】

Design by Wing Mau Products Development Ltd. All Rights Reserved.

WM-6394

12 STYLES CHINESE WEDDING CHARM 2

Size: L-33-42mm, W-6-42mm, H-3-39mm

WM-6394/NC - Each PC In PB; 1000PCS In Large PB; --/2000PC/4.2'

WM-6394/NC/IC - Each PC In PB With I.S. In IC4954 Capsule; 50PCS In Large PB; --/600PC/3.3'

Material: ABS, NP-PVC

*Discrepancies may be found in real products

Design by Wing Mau Products Development Ltd. All Rights Reserved.

WM-6534
5 STYLES (7 VERSIONS) VILLAIN HITTING WITH BALLCHAIN

Size: L-29-40mm, W-18-36mm, H-14-47mm

WM-6534HP/NC - Each PC In PB; 100PCS In Large PB; 500PC/1000PC/3.0'

WM-6534HP/NC/IC - Each PC In PB With I.S. In IC6368 Capsule; 50PCS In Large PB; --/300PC/3.2'

Material: NP-PVC

*Discrepancies may be found in real products

Sheep

Design by Wing Mau Products Development Ltd. All Rights Reserved.

WM-6522
12 STYLES ZODIAC BRONZE STATUE STAMPER (WITHOUT INKPAD)

Size: L-34mm, W-35mm, H-50-58mm

WM-6522GP - Each PC In PB; 100PCS In Large PB; 400PC/800PC/5.0'

WM-6522GP/IC - Each PC In PB With I.S. In IC6368 Capsule; 50PCS In Large PB; --/300PC/3.2'

Material: HIPS, NP-PVC